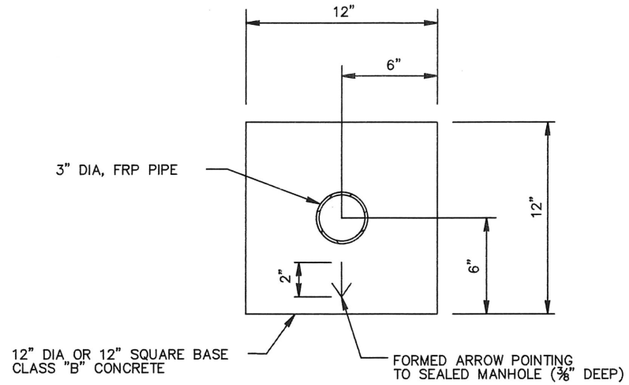


SECTION (A)

CONCRETE FOUNDATION

(SEE NOTE 8)

## NOTES:

1. INSTALL AT LOCATION AND BASED ON 0.2 PERCENT FLOOD ELEVATION SHOWN ON PLAN AND PROFILE DWGS.
2. MINIMUM VENT HEIGHT ELEVATION IS TO BE 2'-6" ABOVE THE NATURAL GROUND OR AS REQUIRED BY CHAPTER 19 SECTION 19-33 OF THE CITY OF HOUSTON CODE OF ORDINANCES, WHICHEVER IS HIGHER.
3. WHEN FLOODPROOFED VENTS ARE SPECIFIED BY THE EOR, REFER TO THE CONTRACT DOCUMENTS FOR CONSTRUCTION REQUIREMENTS.
4. DRAIN TO VENTED (ADJACENT) MH AT MIN 1% SLOPE. CONNECT TO MANHOLE WITH SPECIFIED CONNECTOR.
5. WHEN VENT CROSSES DRAINAGE DITCH, PROVIDE CEMENT STABILIZED SAND BEDDING
6. THE VENT IS TO BE INSTALLED WITHIN THE RIGHT OF WAY.
7. SEE COH STANDARD SPECIFICATIONS FOR PROTECTIVE COATING REQUIREMENTS FOR EXPOSED FRP PIPE.
8. THIS STANDARD DETAIL SETS THE MINIMUM REQUIREMENTS FOR THE MANHOLE VENT'S CONCRETE FOUNDATION AND VENT PIPE SIZE. THE EOR IS RESPONSIBLE FOR THE ADEQUACY AND DESIGN OF THE CONCRETE FOUNDATION AND VENT PIPE SIZE AND SHALL PROVIDE CONSTRUCTION DETAILS IN THE DRAWINGS.

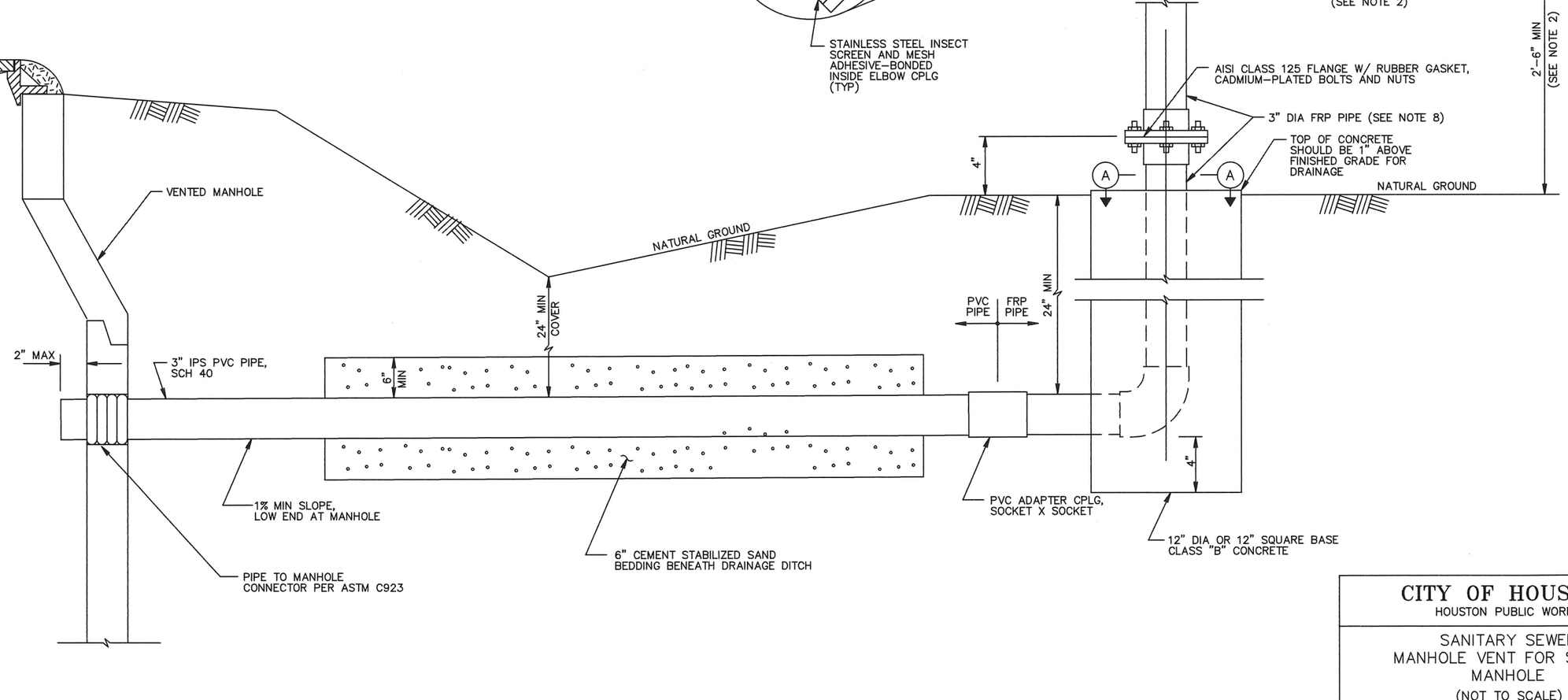


| | |
|---|---|
| CITY OF HOUSTON<br>HOUSTON PUBLIC WORKS | |
| SANITARY SEWER<br>MANHOLE VENT FOR SEALED MANHOLE<br>(NOT TO SCALE) | |
| APPROVED BY:<br>Suhail Kanwar<br>CITY ENGINEER | APPROVED BY:<br>Carol Ellinger Haddock<br>DIRECTOR OF HOUSTON PUBLIC WORKS |
| EFF DATE: JUL-01-2021 | DWG NO: 02082-06 |

COH