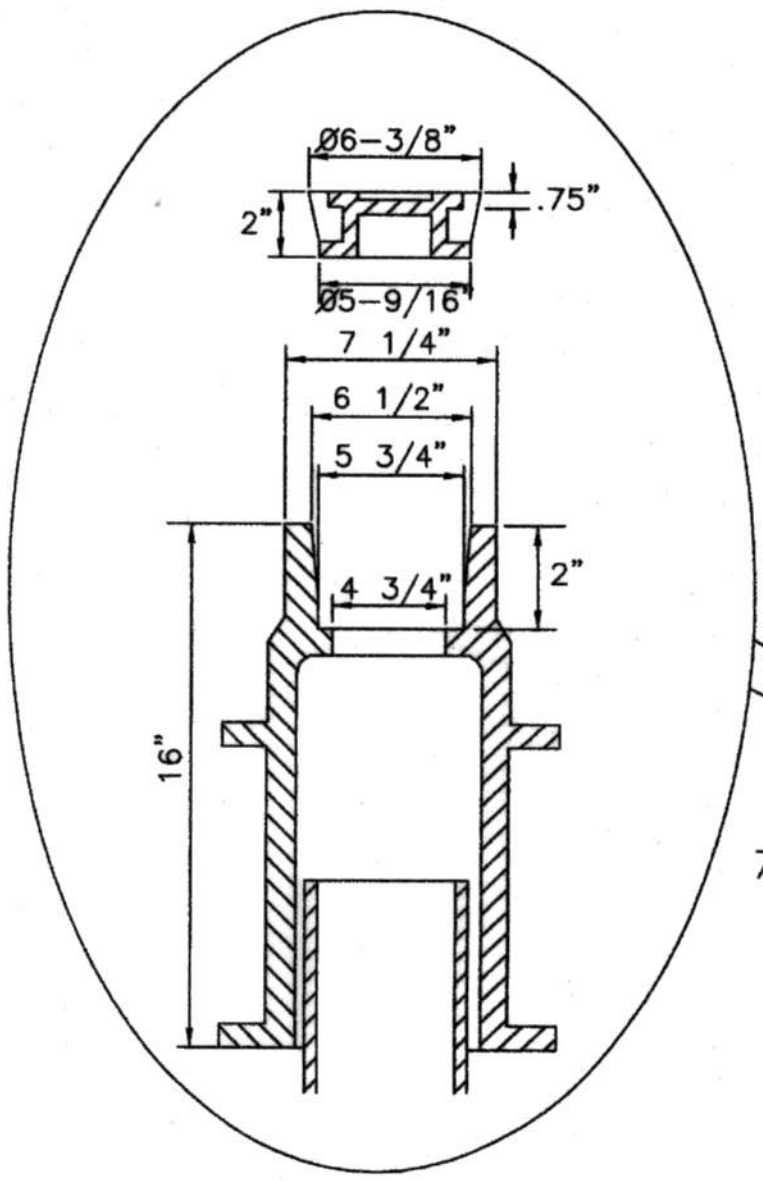

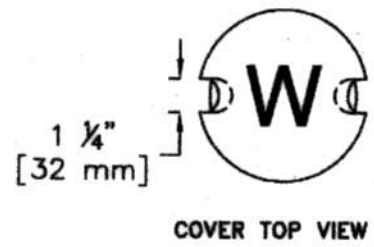

COVER TOP VIEW

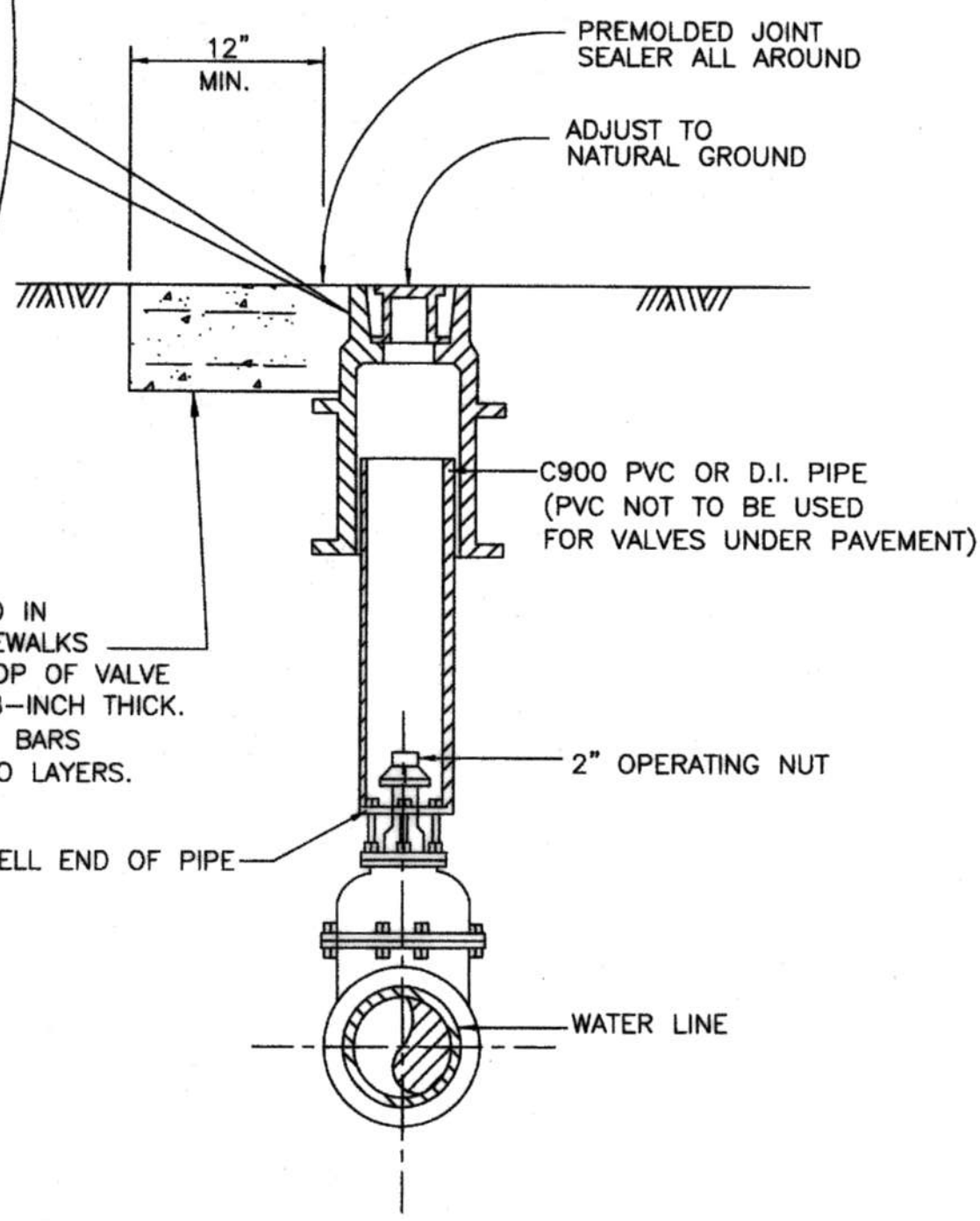

NOTE:

1) APPROXIMATE WEIGHTS

FRAME – 46 LBS

COVER – 10 LBS

2) MATERIAL – GRAY IRON ASTM A48 CL35B

CITY OF HOUSTON DEPARTMENT OF PUBLIC WORKS AND ENGINEERING	
VALVE BOX DETAIL (NOT TO SCALE)	
APPROVED BY:	APPROVED BY:
CITY ENGINEER	DIRECTOR OF PUBLIC WORKS AND ENGINEERING
EFF. DATE: JULY 01, 2010	DWG. NO: 02085–03