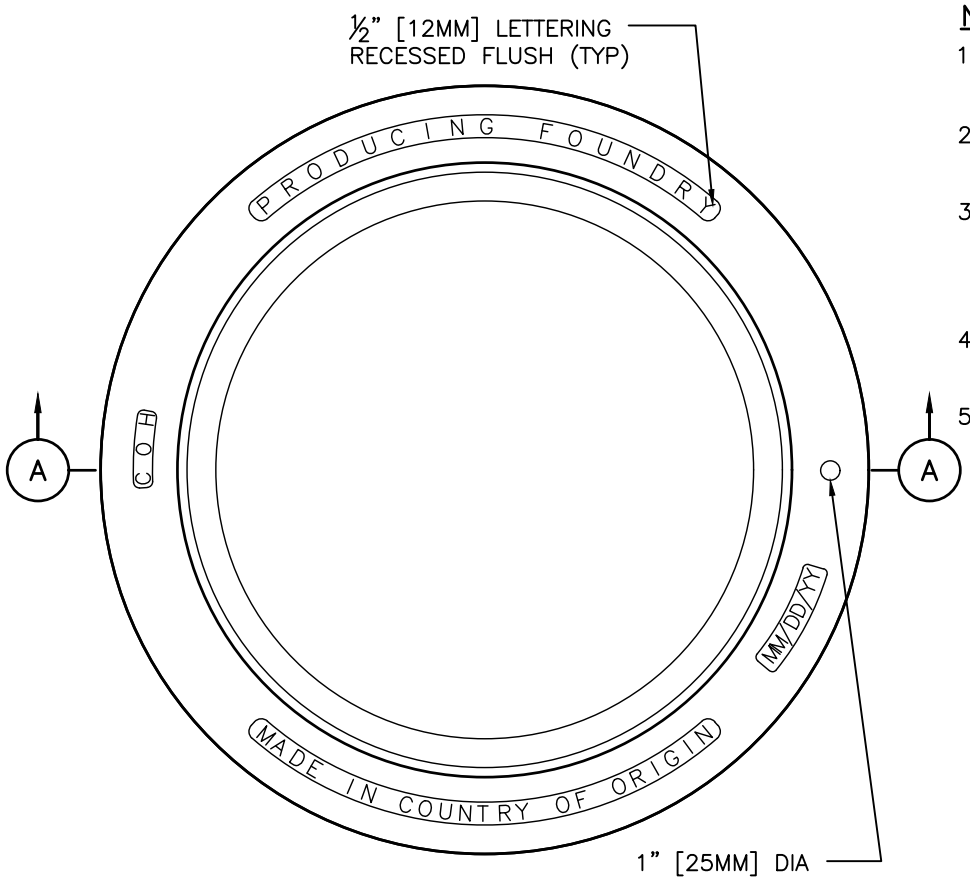

TOP VIEW

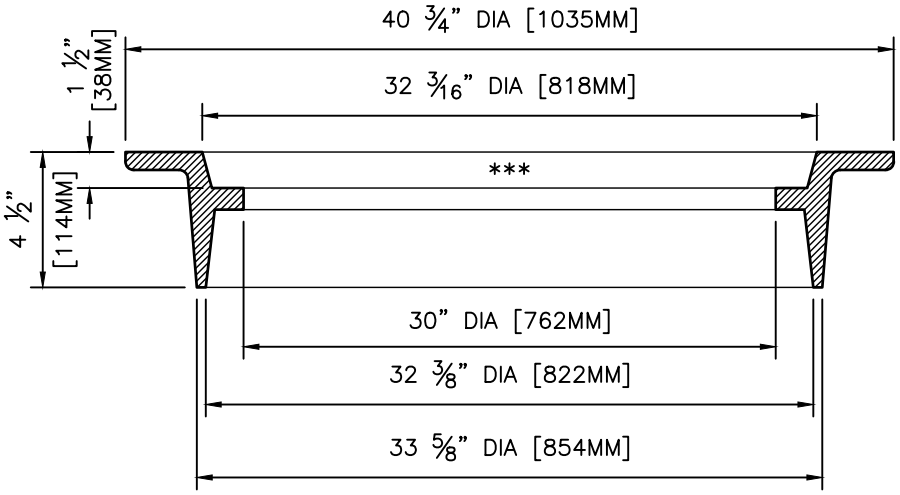

*** MACHINED SURFACE

SECTION A–A

FRAME SECTION

NOTES:

1. APPROXIMATE WEIGHTS: FRAME–190 LBS (86KGS).
2. MATERIALS–GRAY IRON ASTM A48 CL35B.
3. CASTING MUST BE MANUFACTURED AND PROOF TESTED IN ACCORDANCE WITH AASHTO M306.
4. EJ V1816 ASY OR APPROVED EQUAL.
5. IDENTIFICATION MARKINGS MUST COMPLY WITH CITY SPECIFICATIONS. MARKINGS NOT SHOWN ON THIS DETAIL MUST BE PLACED ON THE CASTING:
   - A. PROVIDE ALL FRAME MARKINGS ON THE TOP SIDE OF THE FRAME.
   - B. PROVIDE GRATE AND COVER MARKINGS ON EITHER TOP OR BOTTOM OF CASTING.

DISCLAIMER: THE USE OF THIS STANDARD IS GOVERNED BY THE TEXAS ENGINEERING PRACTICE ACT. THE DESIGN REQUIREMENTS ON THIS STANDARD DO NOT PURPORT TO ADDRESS ALL OF THE SAFETY CONCERNS ASSOCIATED WITH THEIR USE. THE ENGINEER OF RECORD (EOR) IS TO REVIEW THESE DESIGN REQUIREMENTS AND BY AUTHORIZING THEIR USE, ACCEPTS RESPONSIBILITY FOR THEIR APPLICABILITY, ADEQUACY AND SAFETY. NO WARRANTY OF ANY KIND IS MADE BY THE CITY OF HOUSTON FOR ANY PURPOSES WHATSOEVER. THE CITY OF HOUSTON ASSUMES NO RESPONSIBILITY FOR INCORRECT RESULTS OR DAMAGES RESULTING FROM ITS USE.

APPROVED BY:

CITY ENGINEER	DIRECTOR OF HPW
Signed by: 1BEBB22072F84DC...	Signed by: BE463EF0DF454EB...

CITY OF HOUSTON

HOUSTON PUBLIC WORKS STANDARD

32" INVERTED MANHOLE FRAME

(SCALE: NOT TO SCALE)

EFF DATE: MAR–02–2026 | DWG NO: 02090–09